第7.3节 自注意力机制

Self-attention & Multi-head Self-attention & Positional Encoding

前情回顾：序列到序列问题

输出的结果是一个向量序列

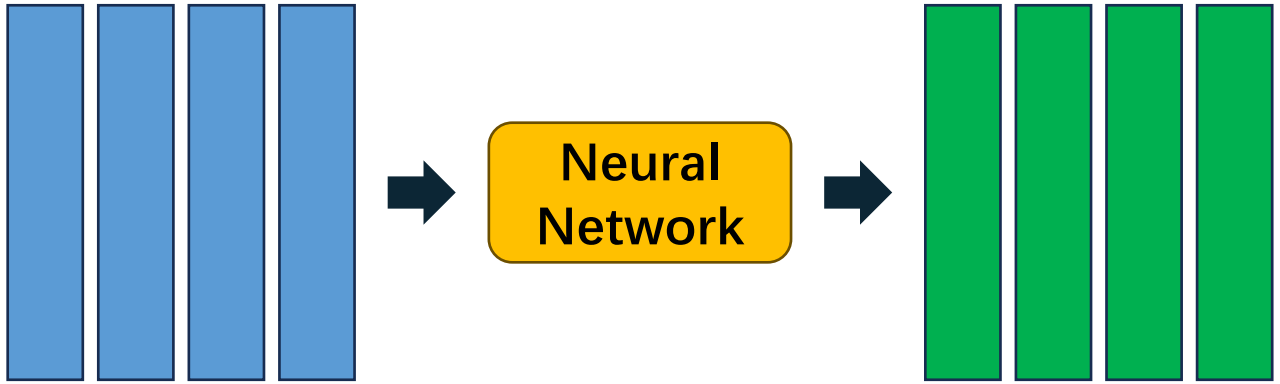

输入是序列　　输出是序列

“真実はいつもひとつ”

Neural Network

“真相只有一个”

“There is only one truth”

Attention Is All You Need

Ashish Vaswani* Google Brain avaswani@google.com
Noam Shazeer* Google Brain noam@google.com
Niki Parmar* Google Research nikip@google.com
Jakob Uszkoreit* Google Research usz@google.com
Llion Jones* Google Research llion@google.com
Aidan N. Gomez* † University of Toronto aidan@cs.toronto.edu
Łukasz Kaiser* Google Brain lukaszkaiser@google.com

Abstract

The dominant sequence transduction models are based on complex recurrent or convolutional neural networks that include an encoder and a decoder. The best performing models also connect the encoder and decoder through an attention mechanism. We propose a new simple network architecture, the Transformer, based solely on attention mechanisms, dispensing with recurrence and convolutions entirely. Experiments on two machine translation tasks show these models to be superior in quality while being more parallelizable and requiring significantly less time to train. Our model achieves 28.4 BLEU on the WMT 2014 English-to-German translation task, improving over the existing best results, including ensembles, by over 2 BLEU. On the WMT 2014 English-to-French translation task, our model establishes a new single-model state-of-the-art BLEU score of 41.0 after training for 3.5 days on eight GPUs, a small fraction of the training costs of the best models from the literature.

“To go to the moon, and stay there, and do the other things we've talked about, as one of the great achievements of the 20th century.”

最后的实验：基于LLM的视频摘要生成

前情回顾：由FNN到RNN

FNN一次只能输入一个1-D向量

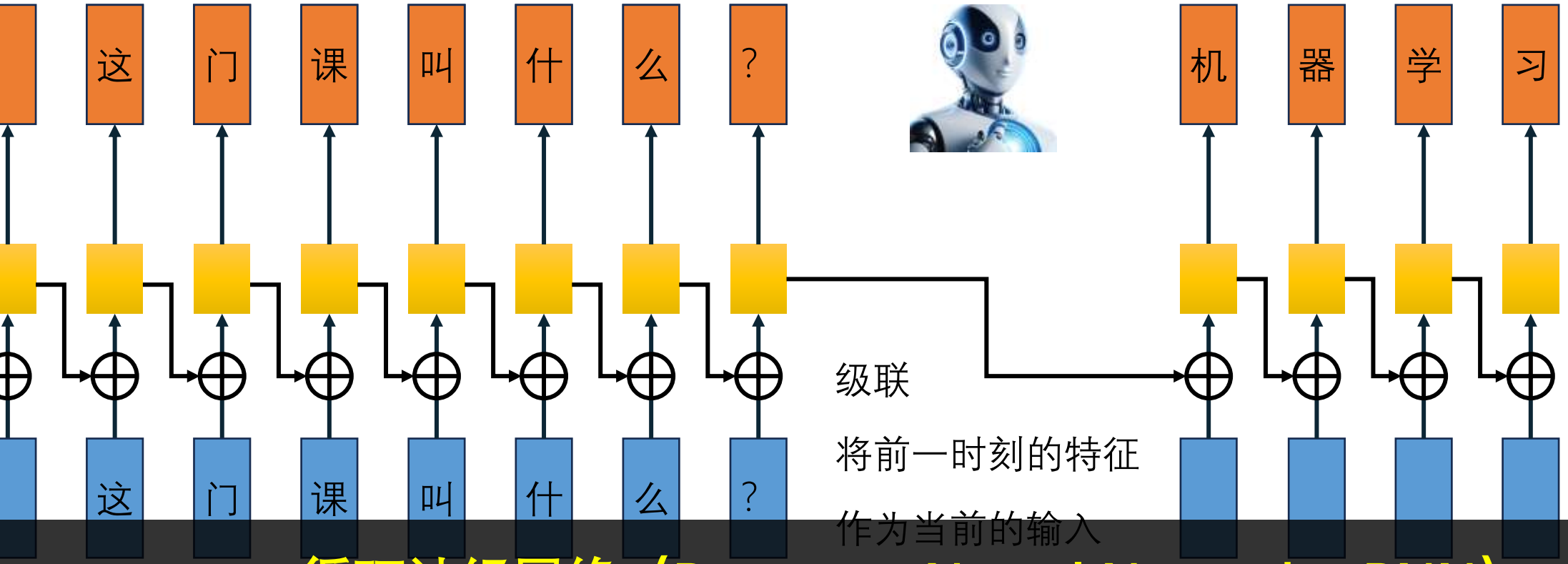

循环神经网络（Recurrent Neural Network，RNN）
具有记忆能力，能够学习时序数据的时间依赖关系

FNN在Seq2Seq上的问题

FNN一次只能输入一个1-D向量

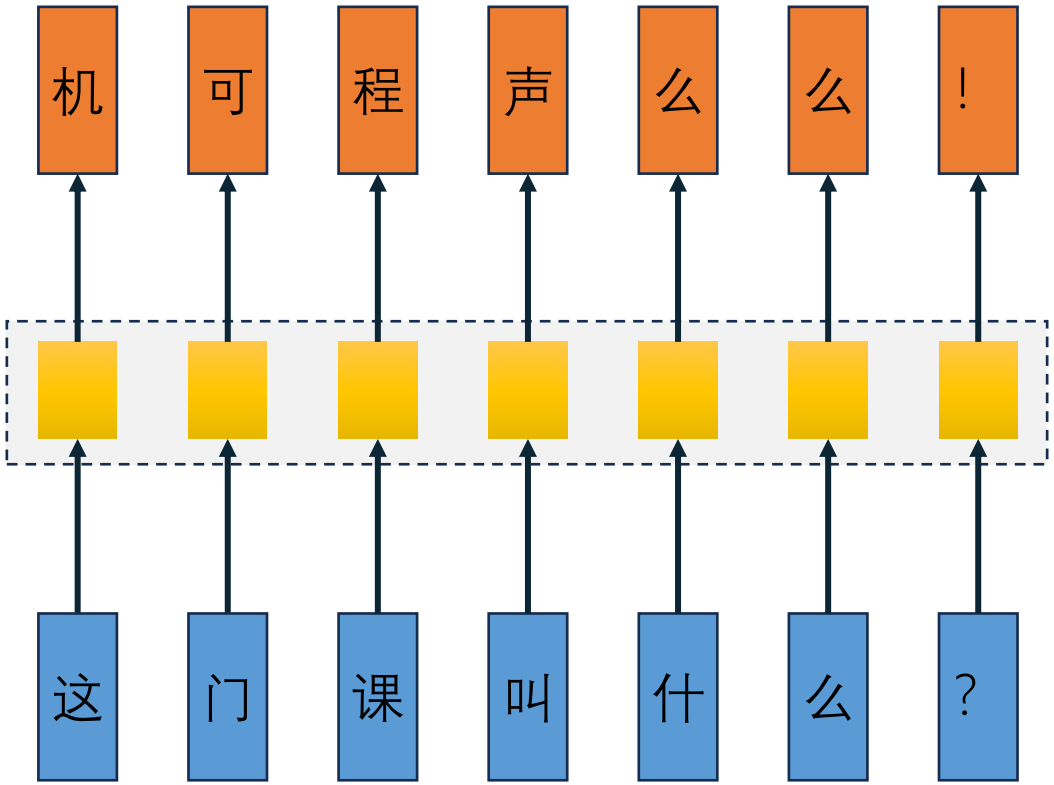

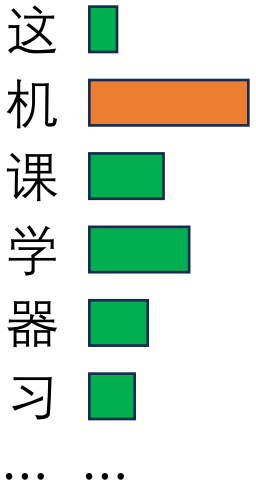

训练语料:

“这机器真稳定！”

“在这机器里面有个BUG！”

“这机会来之不易呀！”

“这门可真扎实！”

不使用RNN，如何联系上下文?

为了让输出的结果更稳定，
FNN应该学习向量之间在时间上的联系，
即上下文关系

FNN在Seq2Seq上的问题

让FNN能够联系上下文的方法

如何让FNN能够考虑整个序列的内容？ 用更大的窗口？

问题：序列的长度是可变的！

自注意力机制
Self-attention

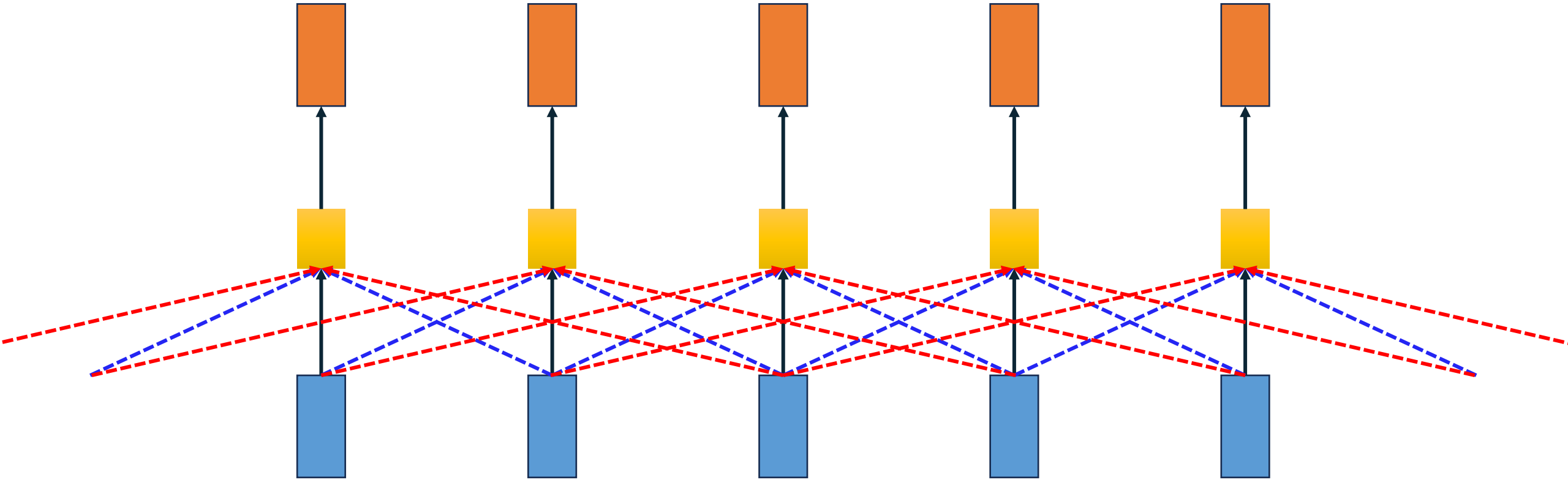

Self-attention

考虑整个
上下文内容

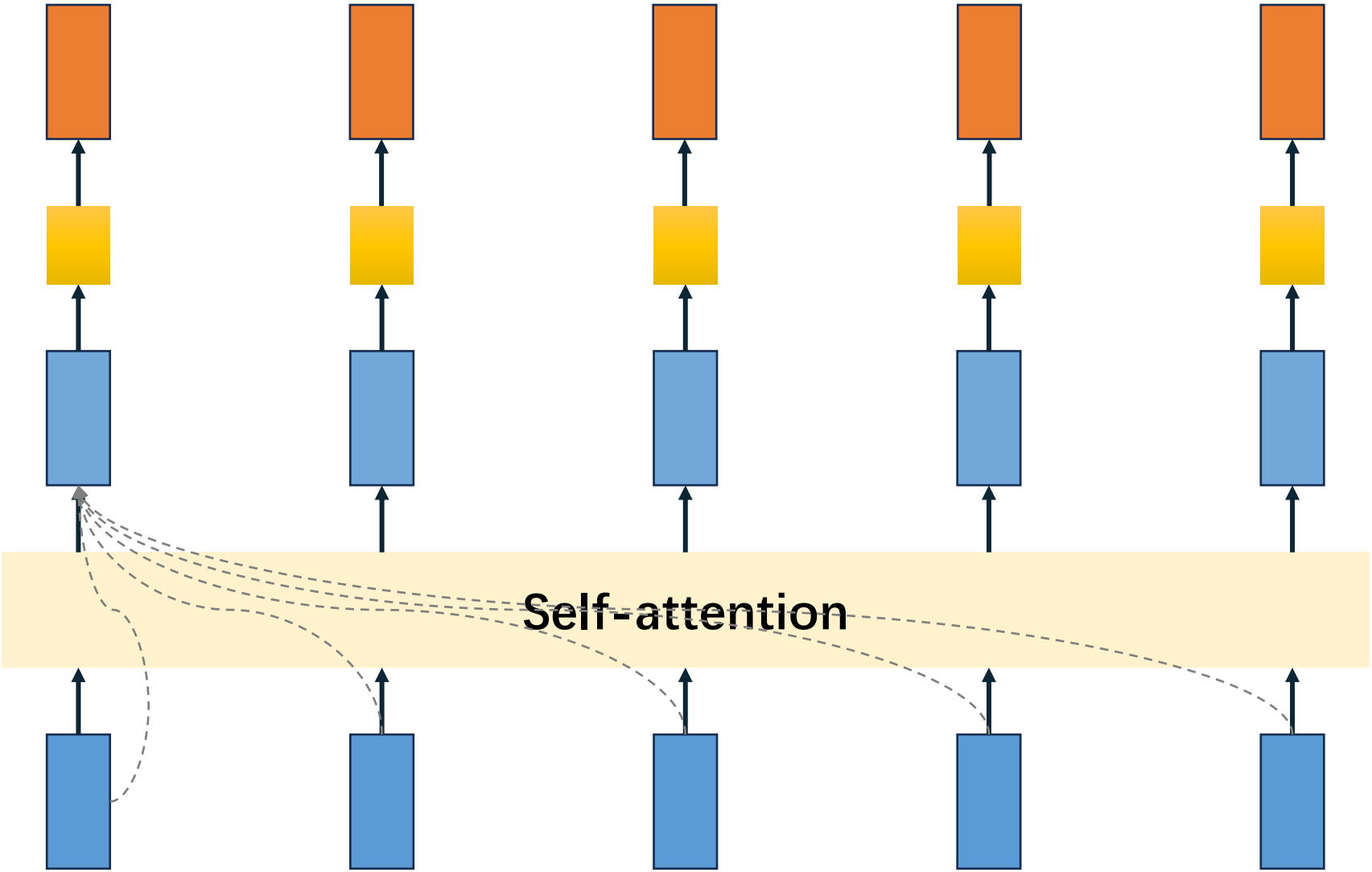

Self-attention

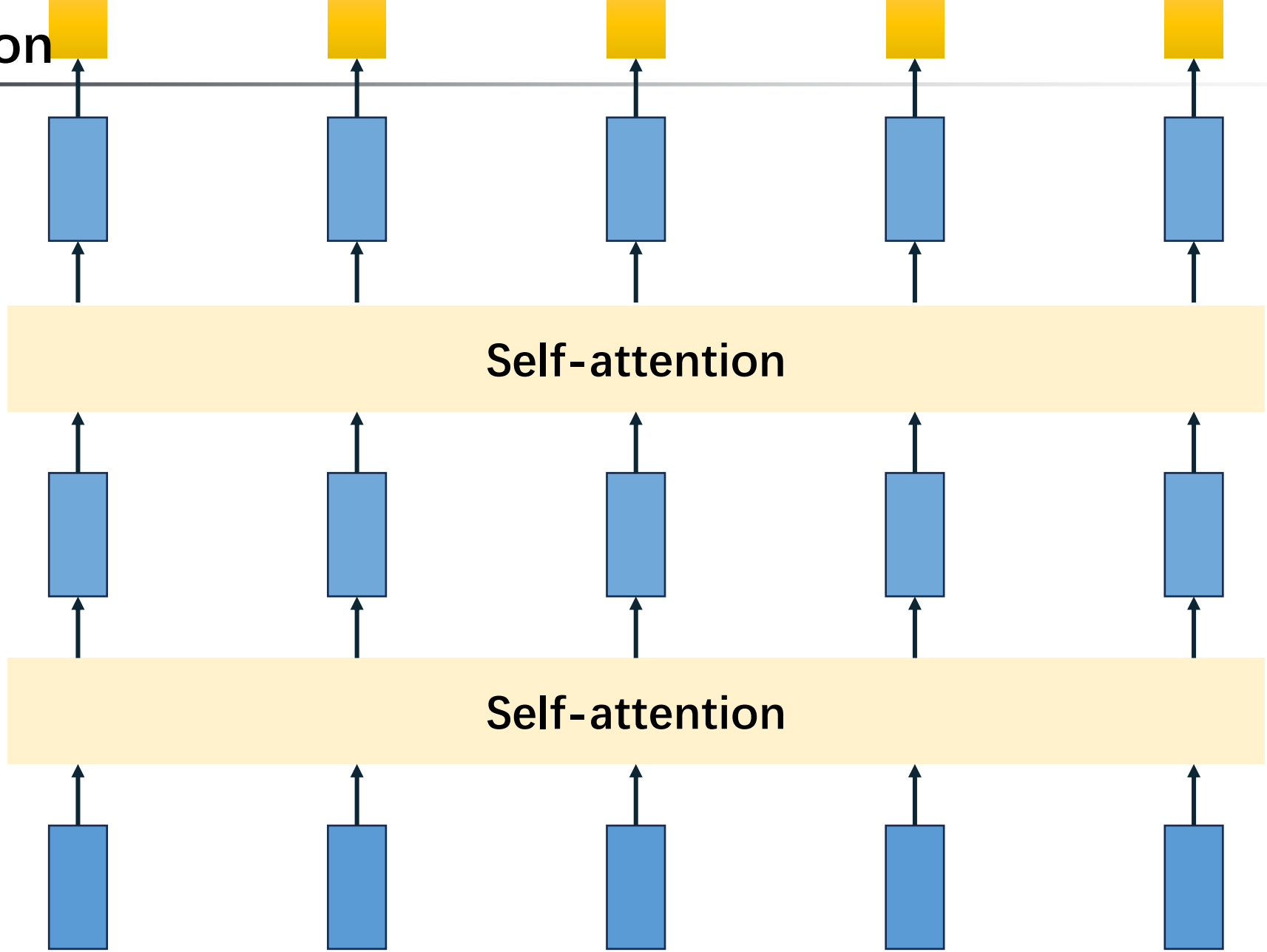

Self-attention
可以不断堆叠

Self-attention

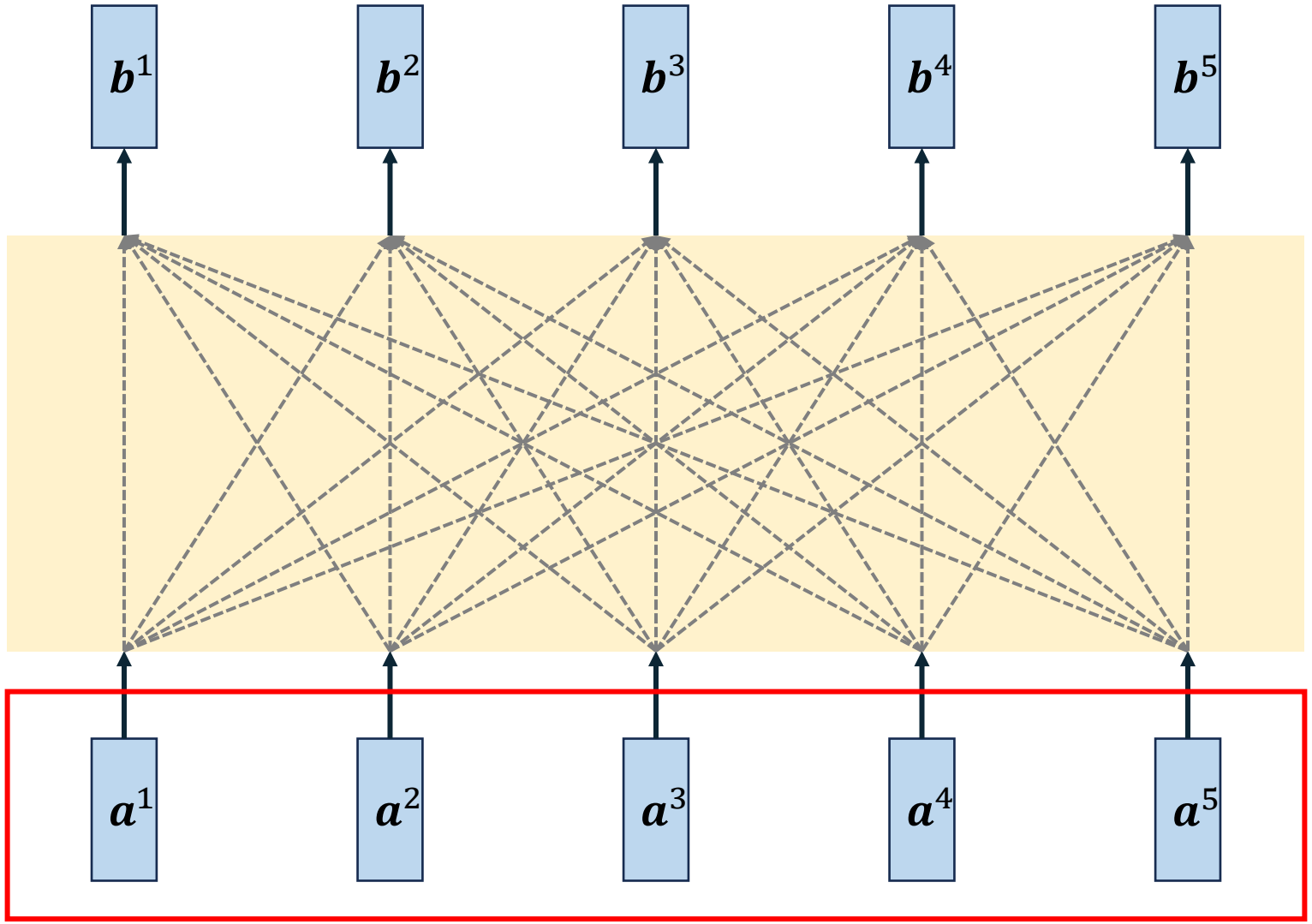

Input 或 Hidden layer

Self-attention

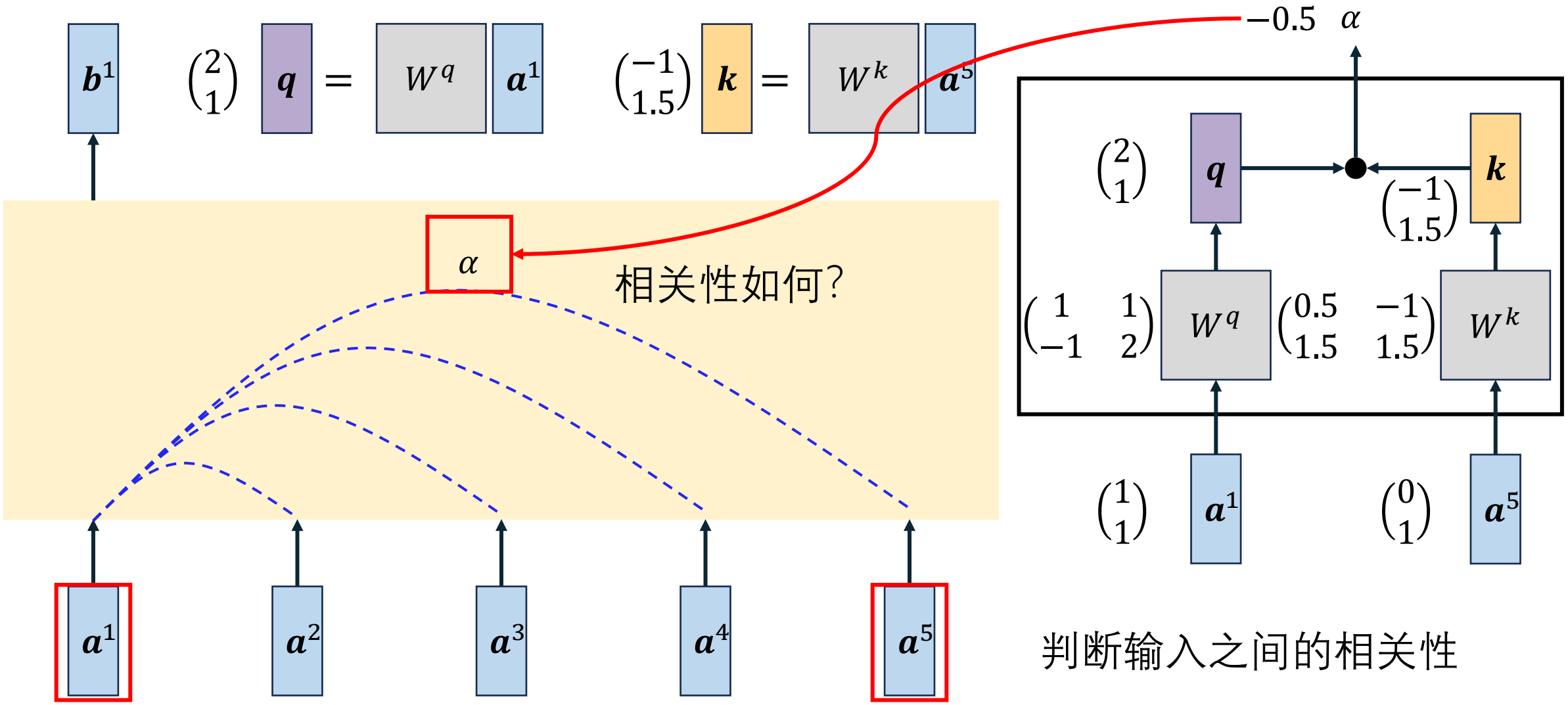

判断输入之间的相关性

Self-attention

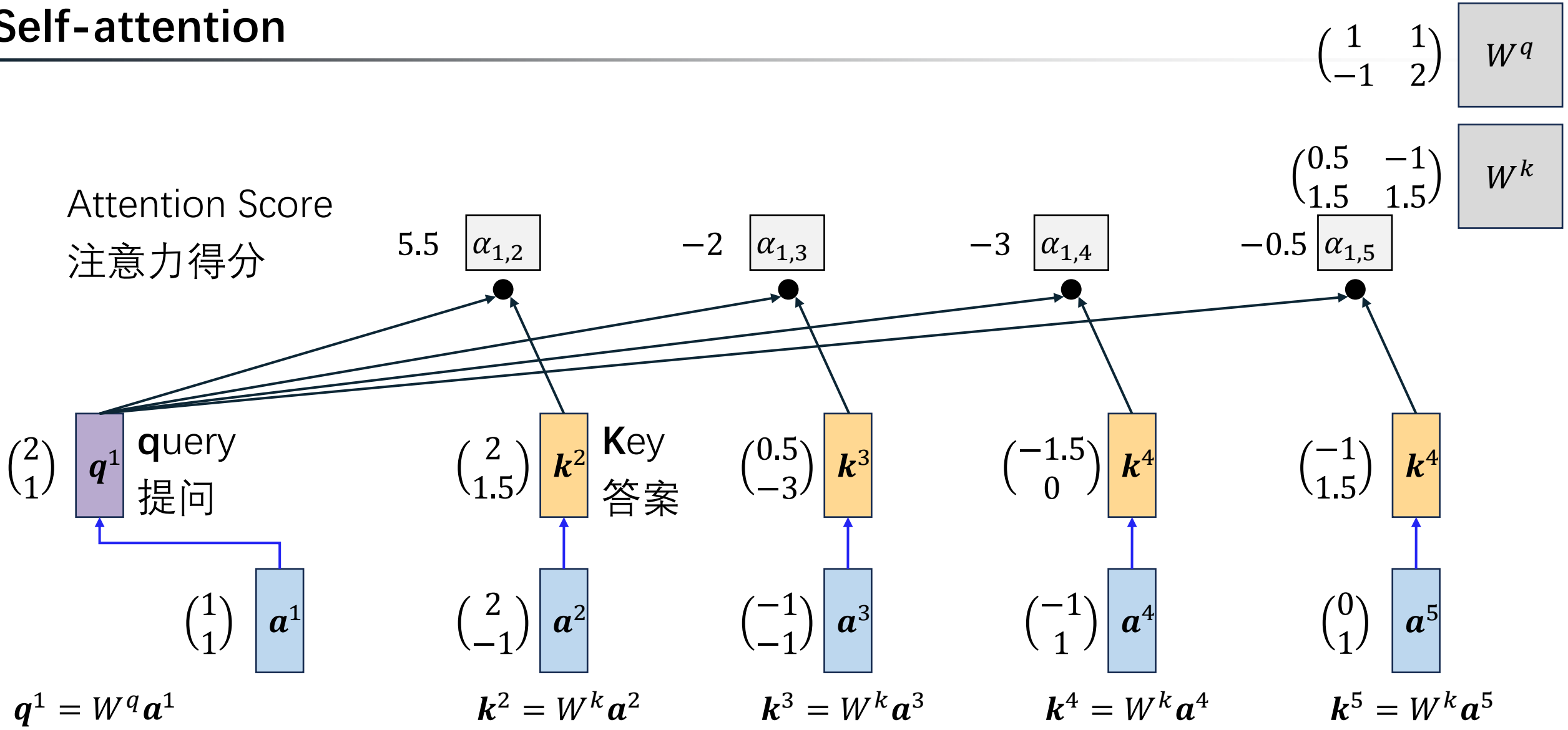

Self-attention

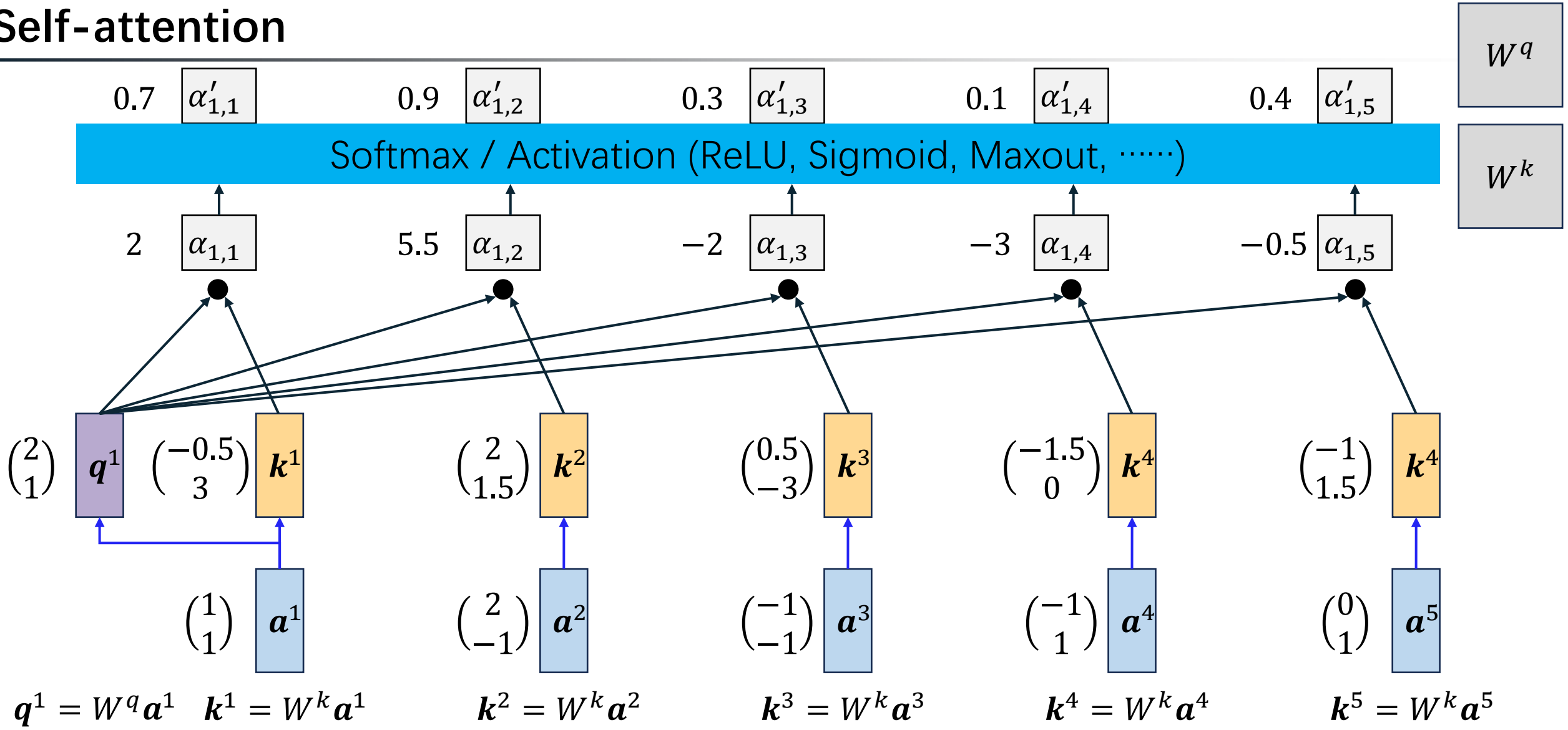

Self-attention

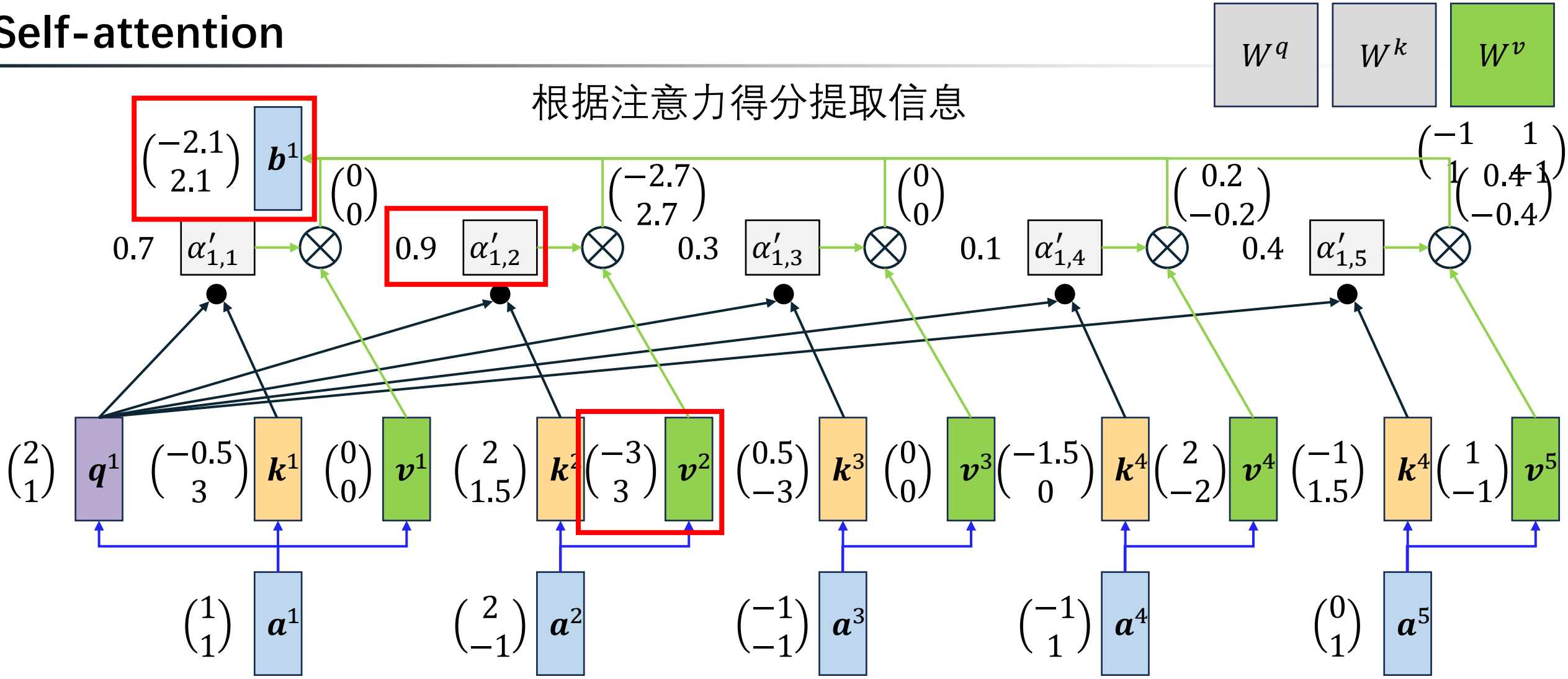

Self-attention

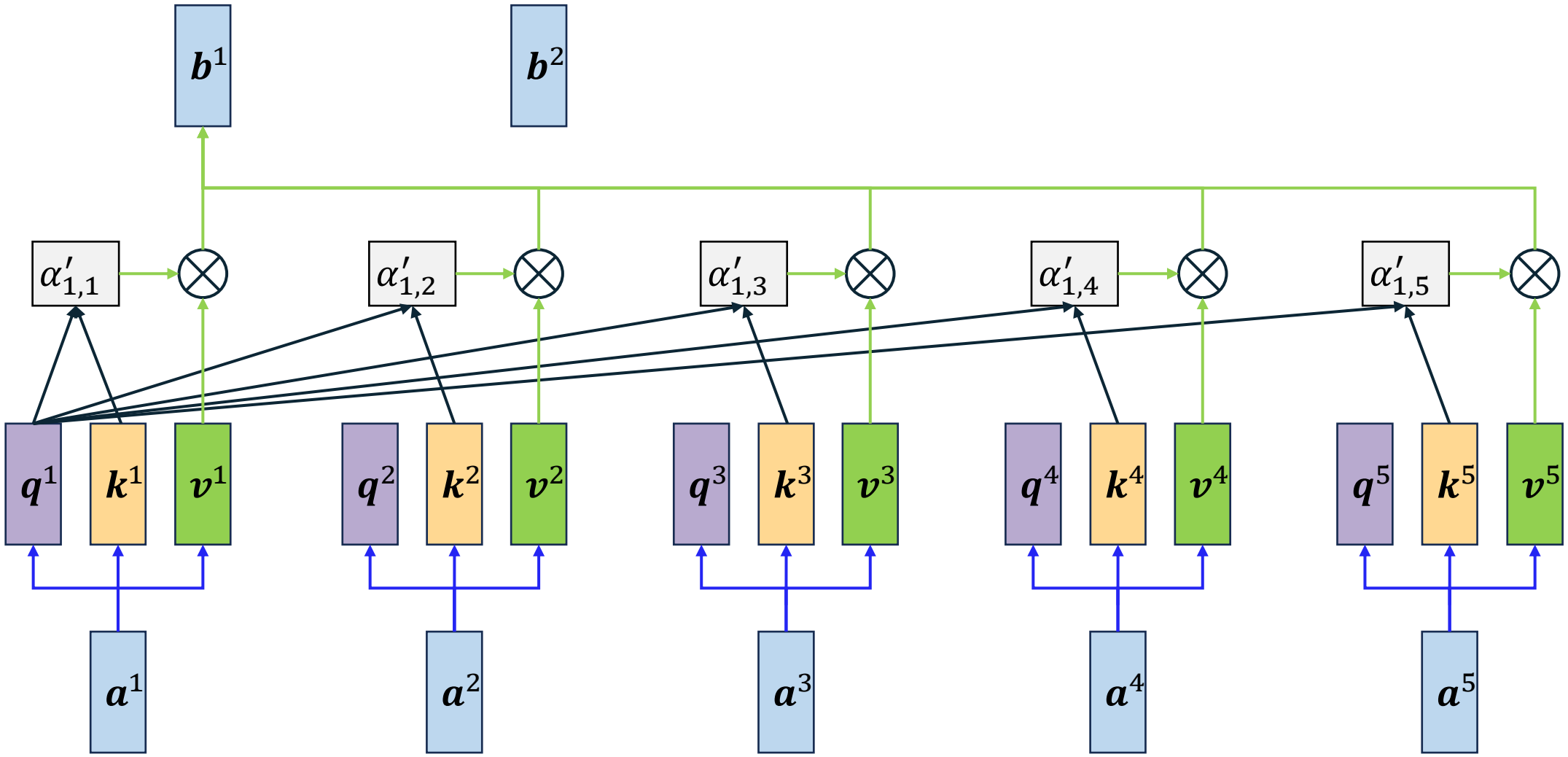

Self-attention

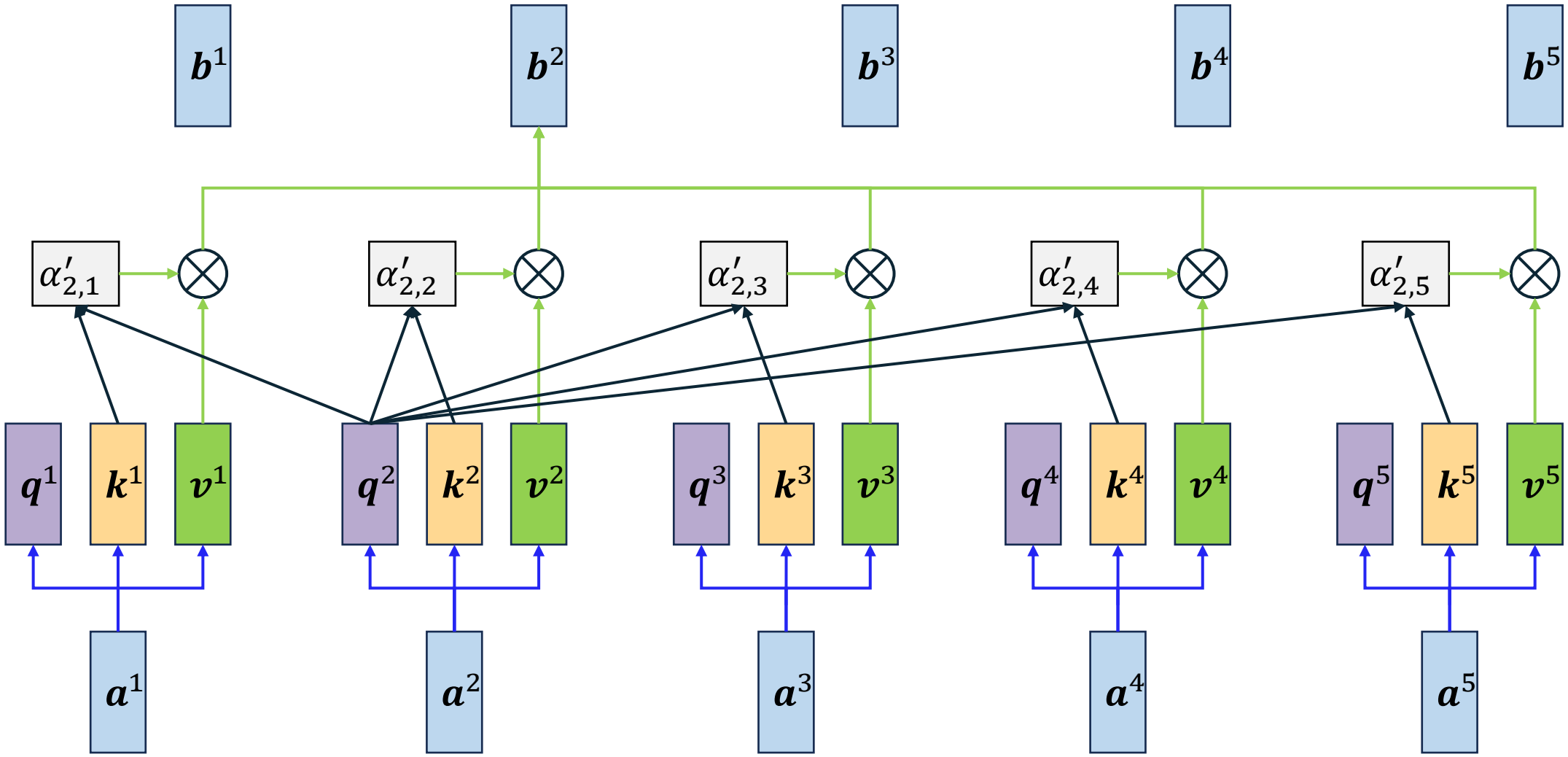

Self-attention的矩阵表示

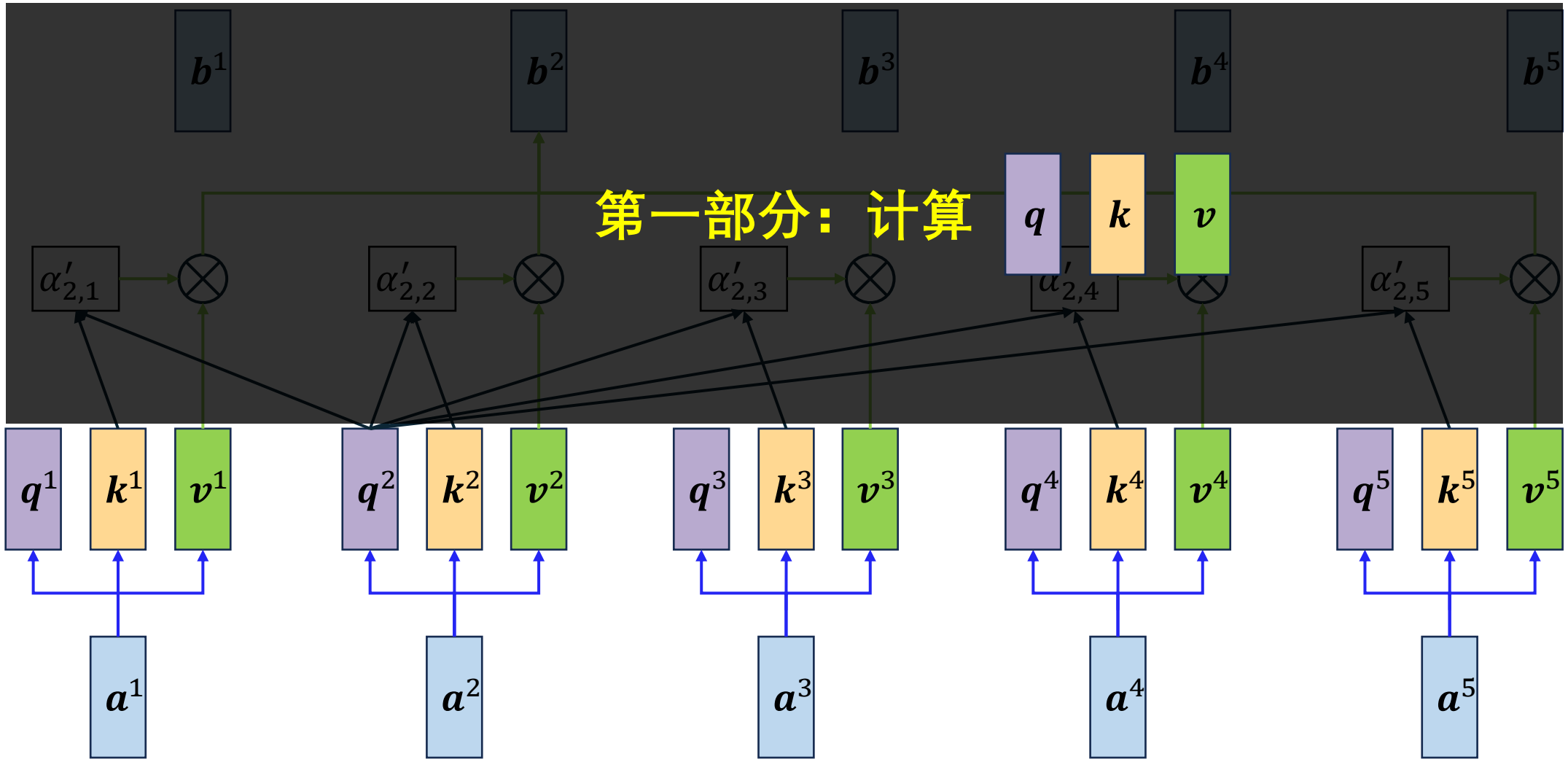

Self-attention的矩阵表示

$$\boxed{q^1\ q^2\ q^3\ q^4\ q^5} = W^q \boxed{a^1\ a^2\ a^3\ a^4\ a^5}$$

Q $\quad N \times N \quad$ I

$$v^1\ v^2\ v^3\ v^4\ v^5 = W^k\ a^1\ a^2\ a^3\ a^4\ a^5$$

V $\quad I$

$$k^1\ k^2\ k^3\ k^4\ k^5 = W^k\ a^1\ a^2\ a^3\ a^4\ a^5$$

K $\quad I$

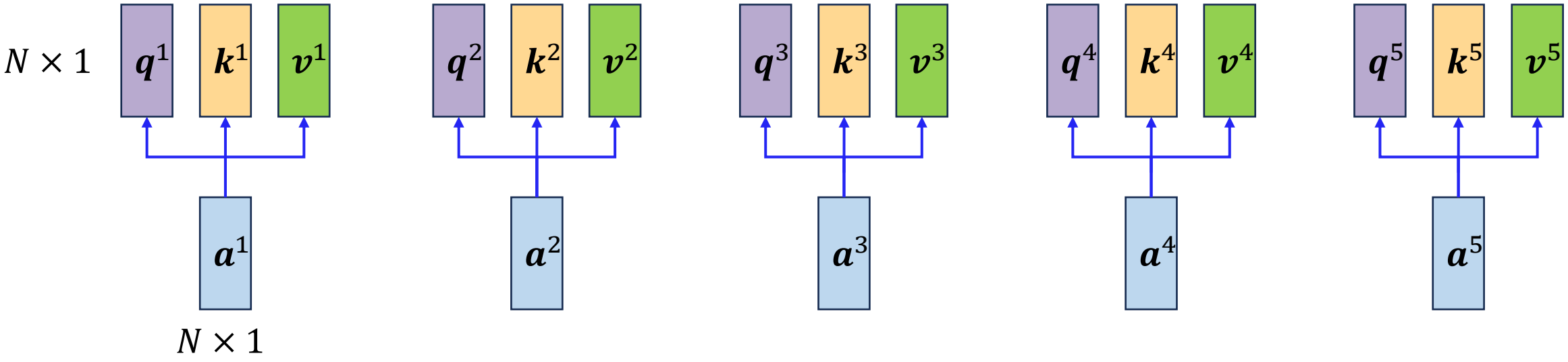

Self-attention的矩阵表示

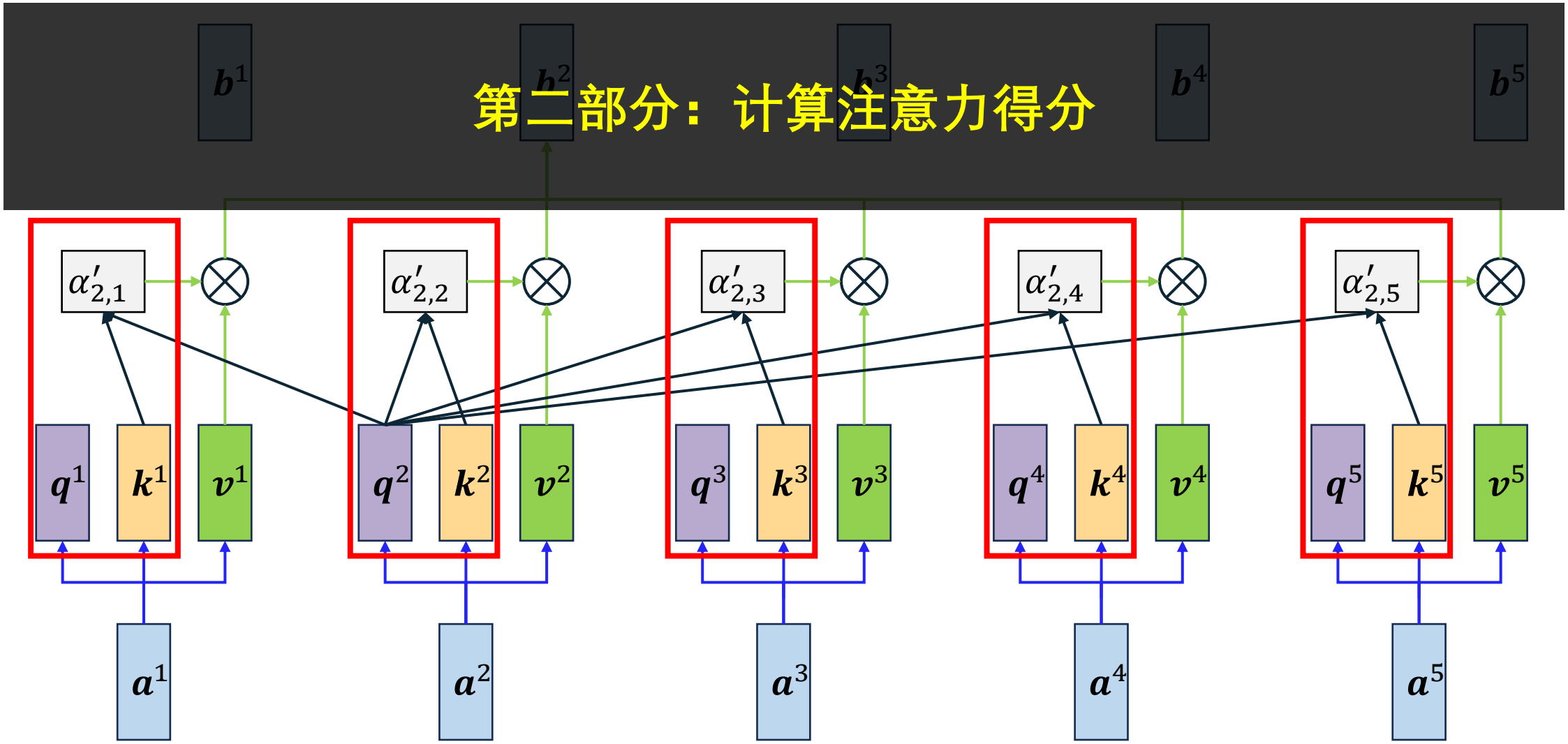

Self-attention的矩阵表示

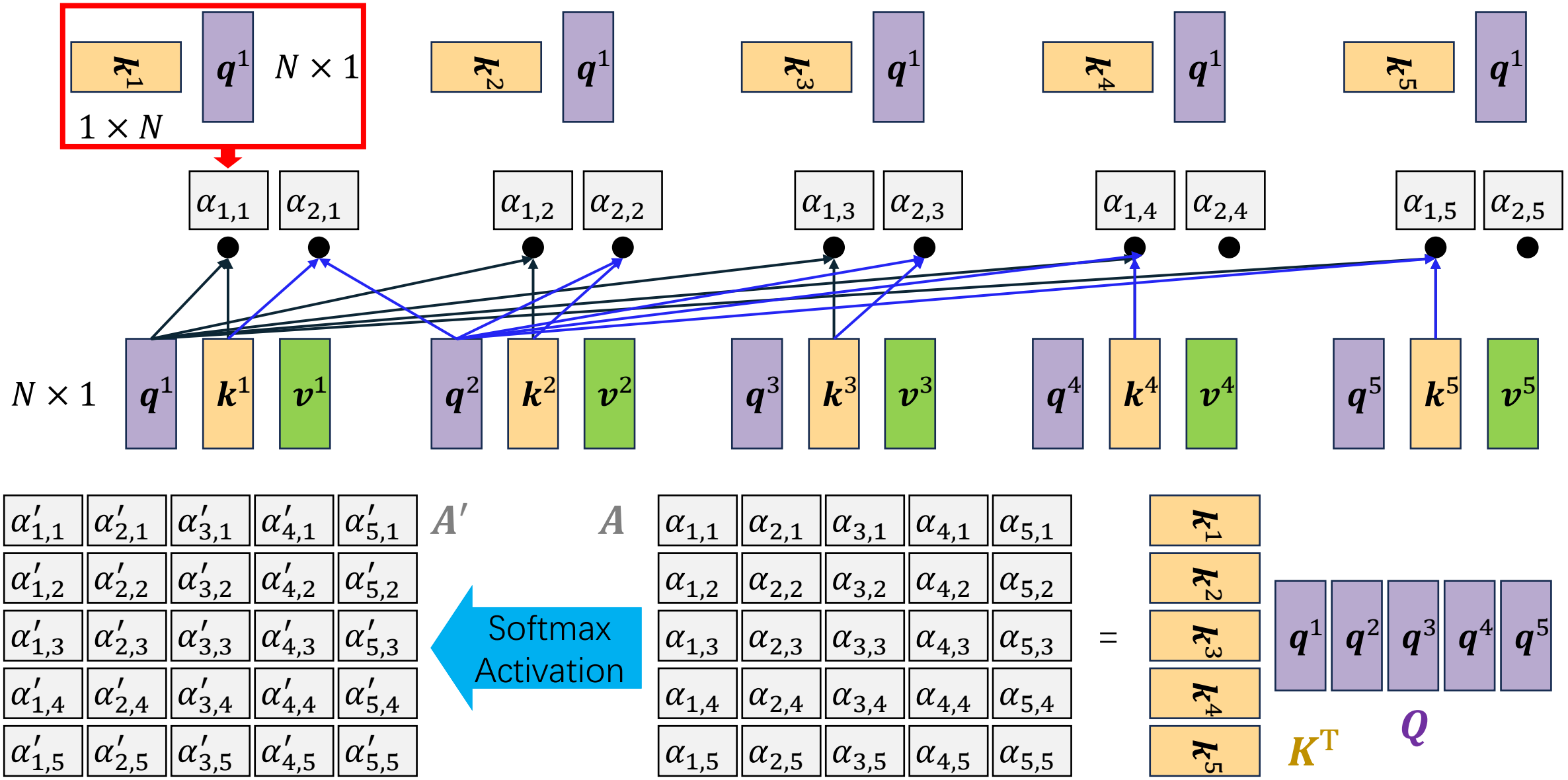

Self-attention的矩阵表示

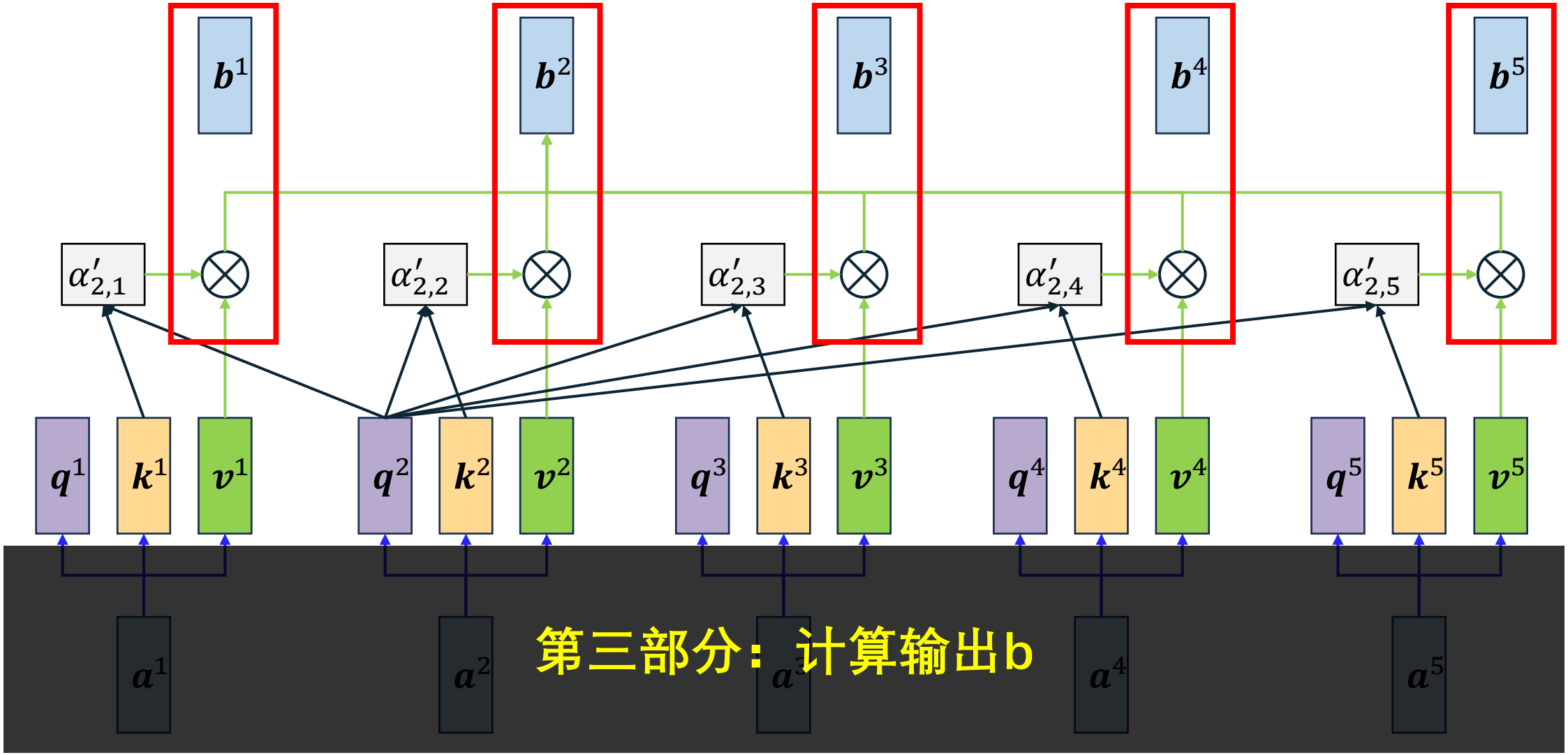

Self-attention的矩阵表示

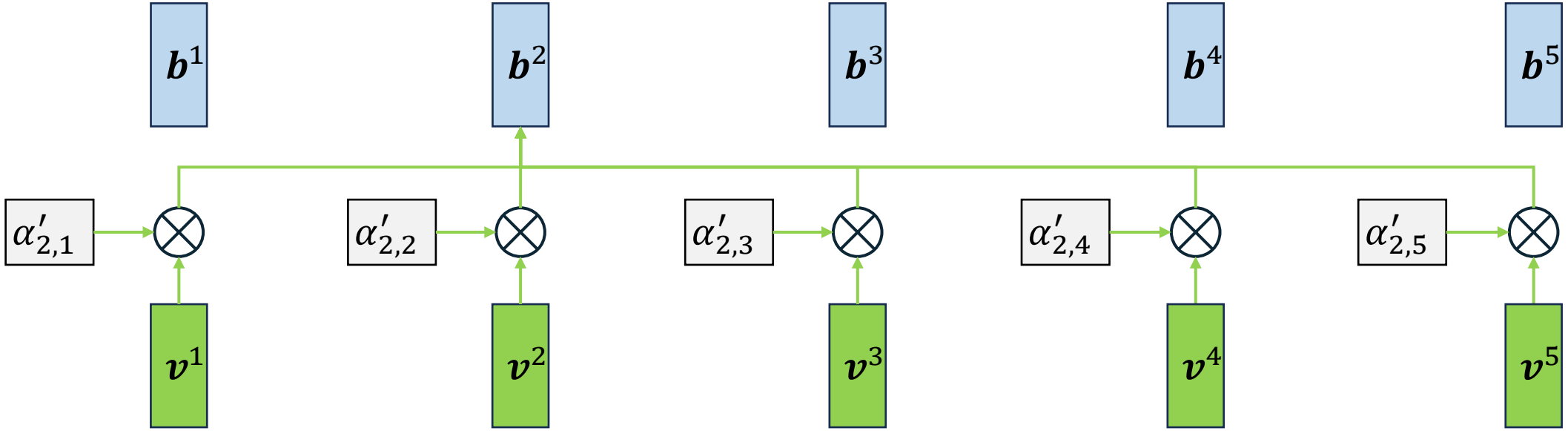

$$\underbrace{\begin{bmatrix} b^1 & b^2 & b^3 & b^4 & b^5 \end{bmatrix}}_{O} = \underbrace{\begin{bmatrix} v^1 & v^2 & v^3 & v^4 & v^5 \end{bmatrix}}_{V} \underbrace{\begin{bmatrix} \alpha'_{1,1} & \alpha'_{2,1} & \alpha'_{3,1} & \alpha'_{4,1} & \alpha'_{5,1} \\ \alpha'_{1,2} & \alpha'_{2,2} & \alpha'_{3,2} & \alpha'_{4,2} & \alpha'_{5,2} \\ \alpha'_{1,3} & \alpha'_{2,3} & \alpha'_{3,3} & \alpha'_{4,3} & \alpha'_{5,3} \\ \alpha'_{1,4} & \alpha'_{2,4} & \alpha'_{3,4} & \alpha'_{4,4} & \alpha'_{5,4} \\ \alpha'_{1,5} & \alpha'_{2,5} & \alpha'_{3,5} & \alpha'_{4,5} & \alpha'_{5,5} \end{bmatrix}}_{A'}$$

Self-attention的矩阵表示

$$W^q \; I = Q$$

$$W^k \; I = K$$

$$W^v \; I = V$$

$$K^{\mathrm{T}} \; Q = A$$

$$O = V \; A'$$

需要学习的内容

Multi-head Self-attention

不同的头关注
不同的模式

部分场景中仅有一种
相关性是不够的

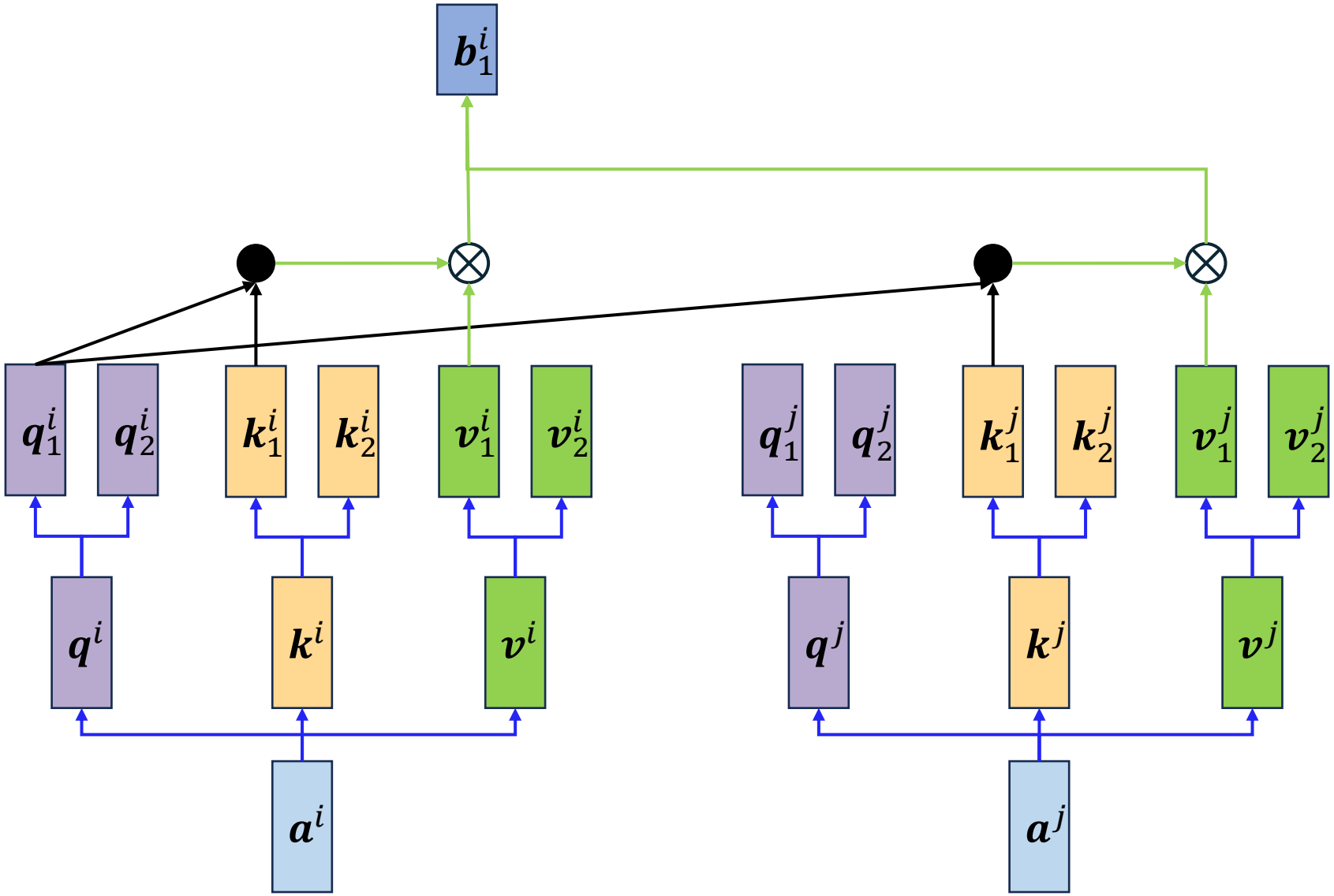

Multi-head Self-attention

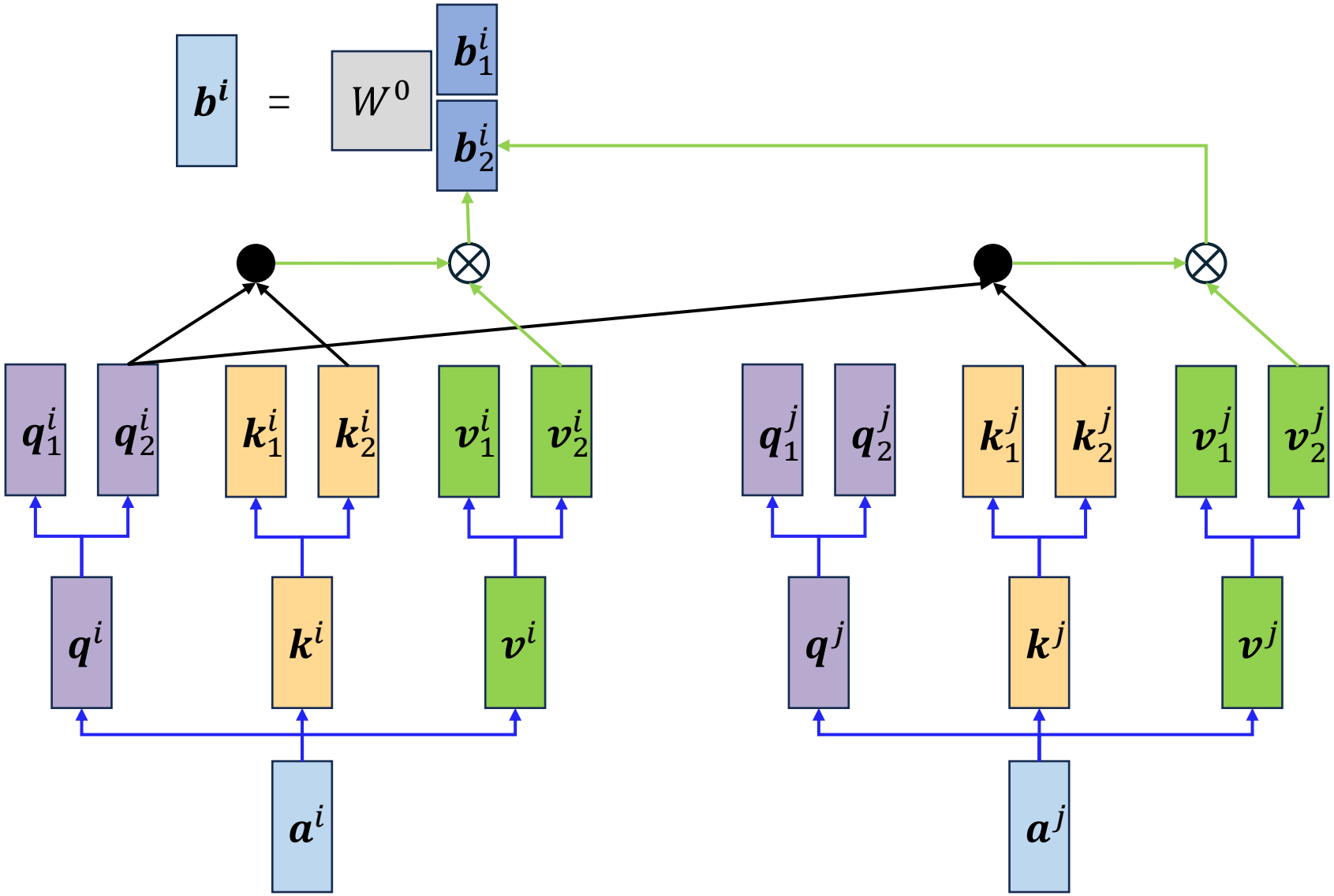

不同的头关注
不同的模式

部分场景中仅有一种
相关性是不够的

Self-attention

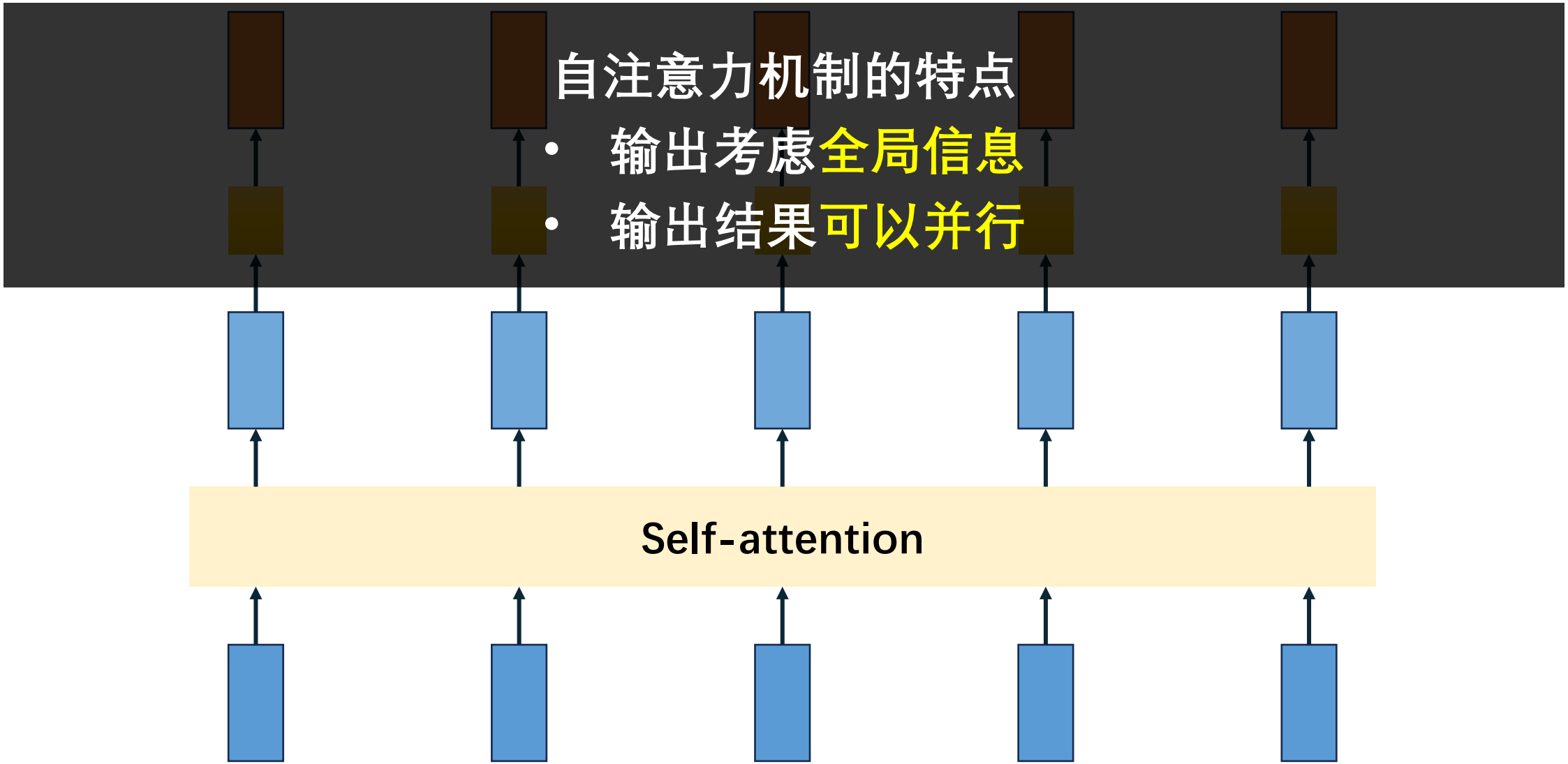

Positional Encoding

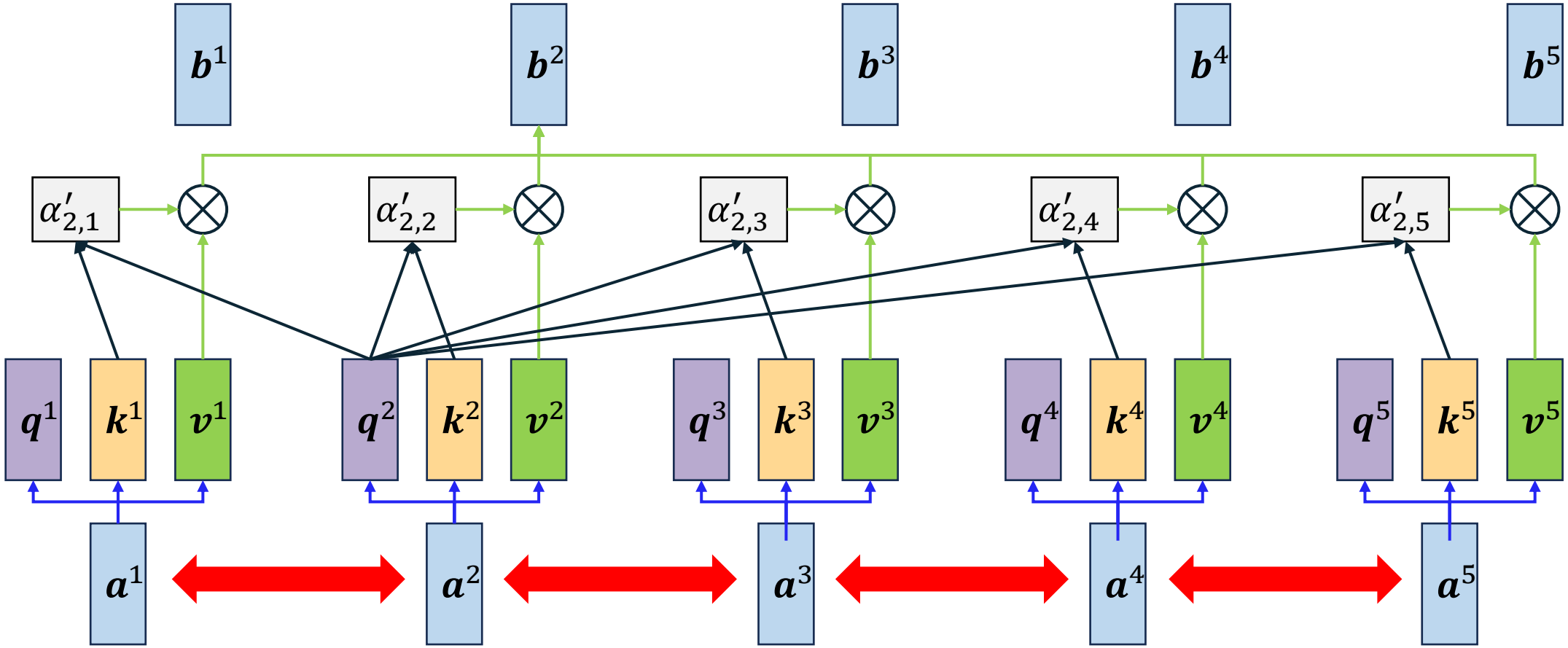

输出的结果和输入的顺序无关（但位置其实很重要）

Positional Encoding

既然缺少位置信息
在输入中加上就好

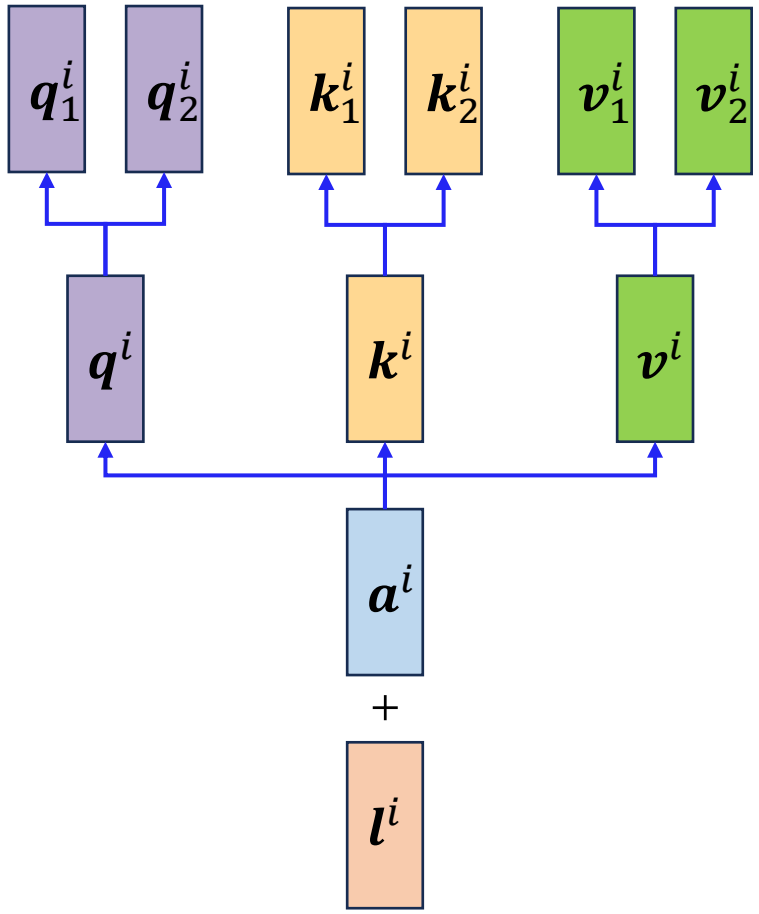

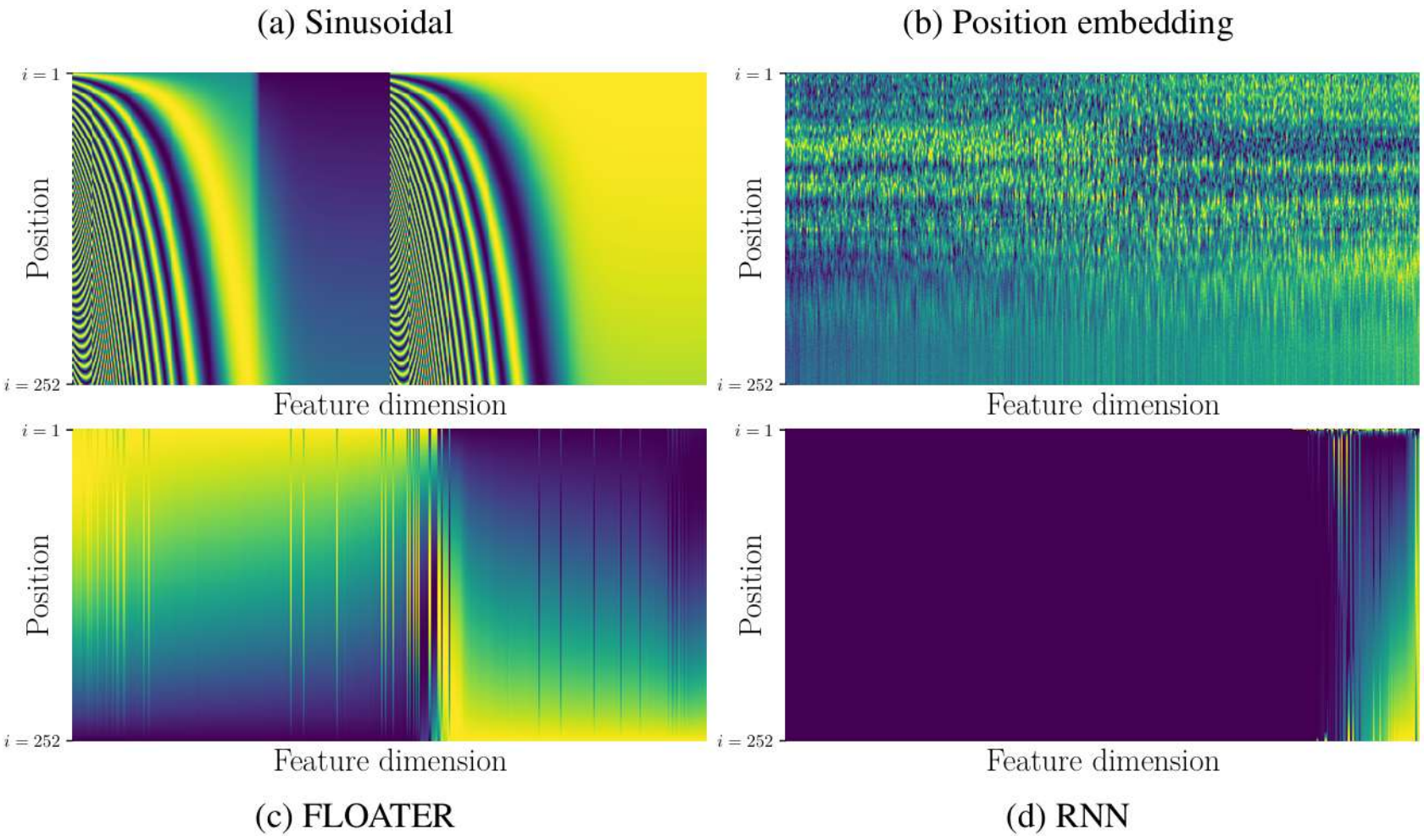

为什么说“Attention is all you need？”

Self-attention vs CNN

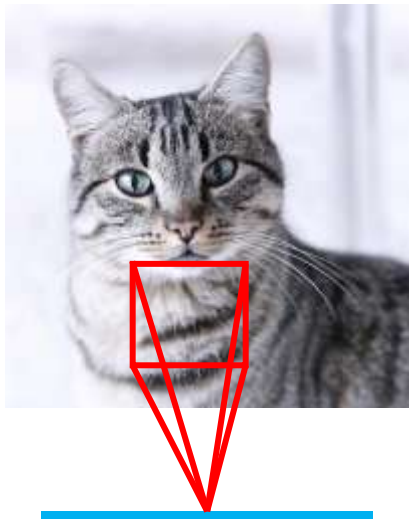

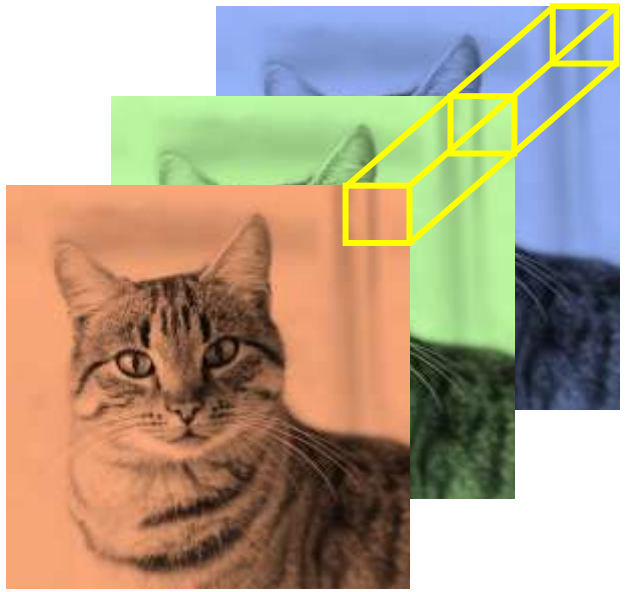

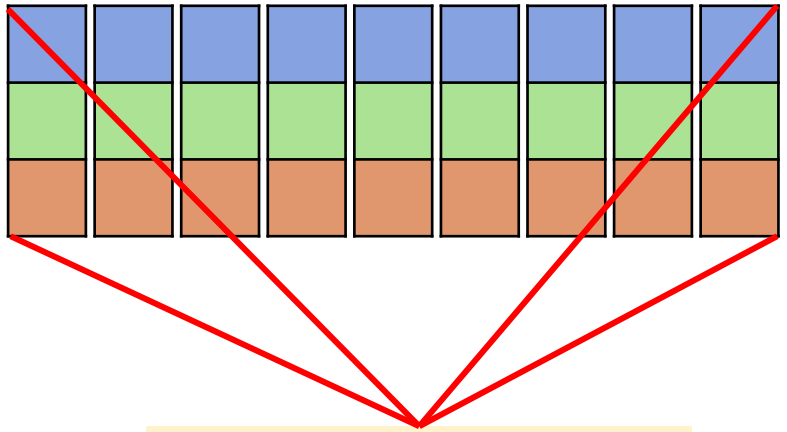

CNN

关注局部特征

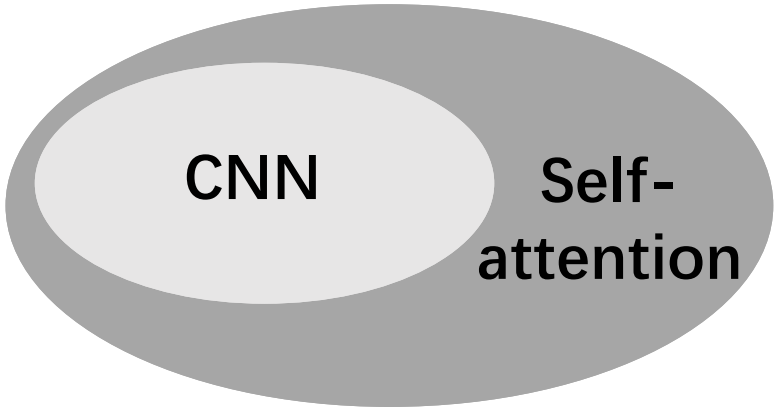

Self-attention

纵观全局特征
关注局部特征

为什么说“Attention is all you need？”

Self-attention vs RNN

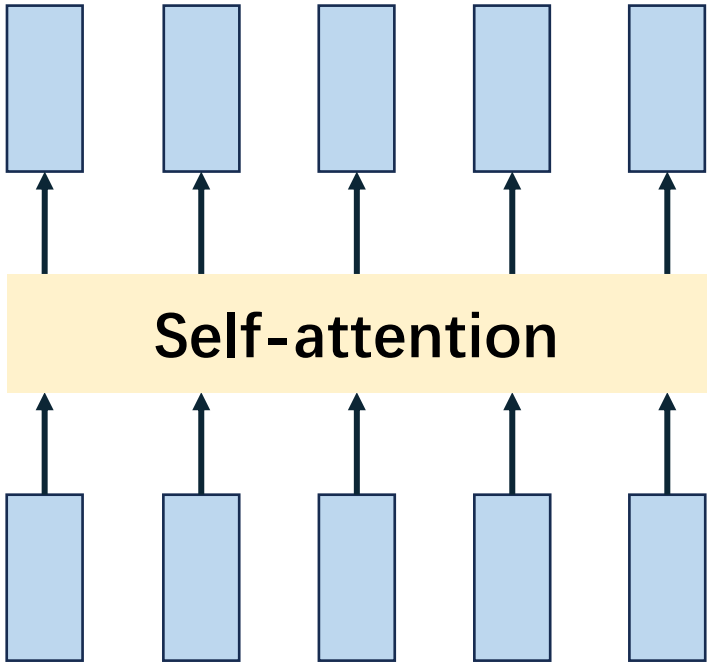

可以并行执行

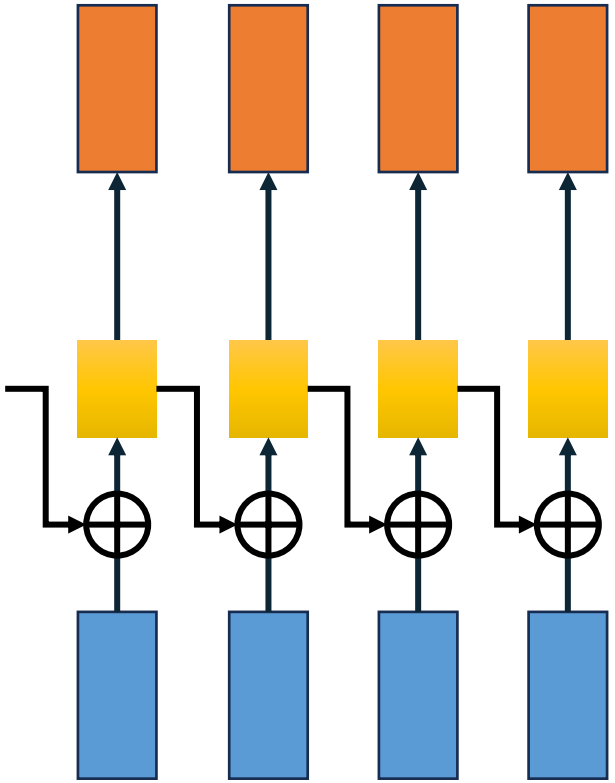

只能顺序执行

小结

Self-attention

Multi-head Self-attention

Positional Encoding

Self-attention vs CNN vs RNN